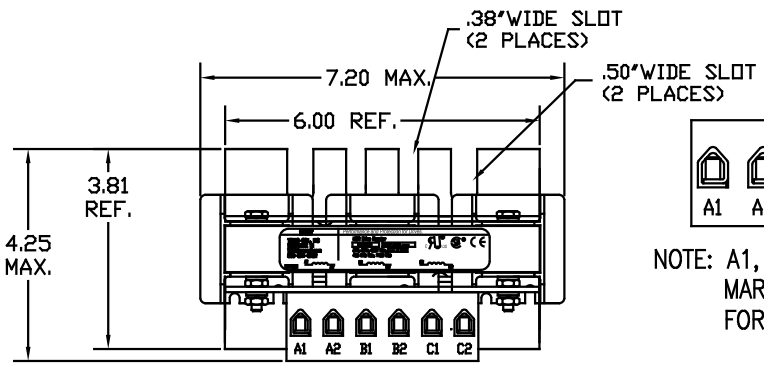

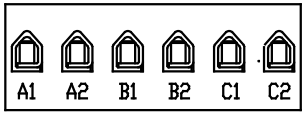

NOTE: A1, A2, B1, B2, C1, C2, MARKINGS ON TERMINAL BLOCK FOR REFERENCE ONLY.

CATALOG NO	VOLTAGE	NEC MOTOR HP	NEC MOTOR CURRENT	WATTS LOSS	APPROX WT-LBS	TORQUE (LB-IN)
KDRD26L	208/240	20	59.4	94	12	20

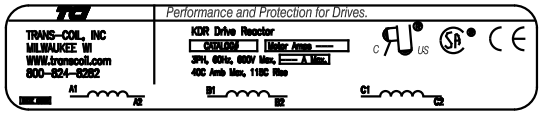

NOTE: NEC MOTOR CURRENT SHOWN ARE BASED ON HORSEPOWER AT 208 VOLTS.

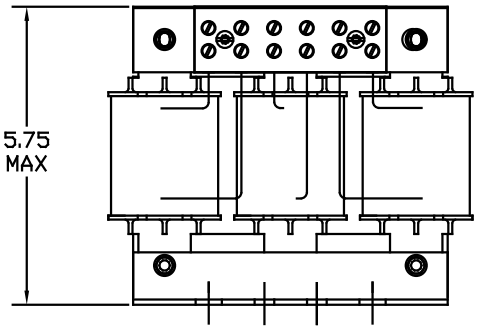

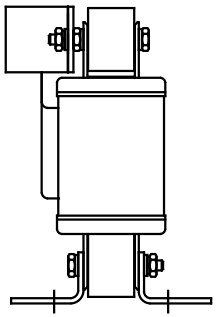

Block Wire Range:	#18 to #4 AWG Solid or Stranded, Copper
Tightening Torque:	20 LB-IN

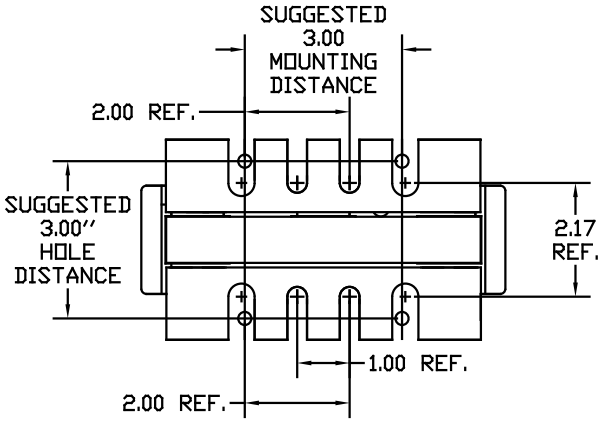

NO	REVISION	DATE	BY
B	ADD MARKING NOTE	11/20/06	DSW
A	2235 MOUNTING CHANGE	09/15/03	DSW

TOLERANCES (EXCEPT AS NOTED)
DECIMAL .XX ±.03 .XXX±.01
FRACTIONAL ± 1/32
ANGULAR ± 1/2°

TCI 7878 N. 86th STREET MILWAUKEE, WI 53224

KDR 200V SERIES, LOW Z WIDE RANGE DRIVE REACTOR

DRN. BY DSW | DATE 02/21/03 | DWG. NO. B KDRD26LDG
SCALE TO FIT | APRVD. | SHT. 1 OF 1