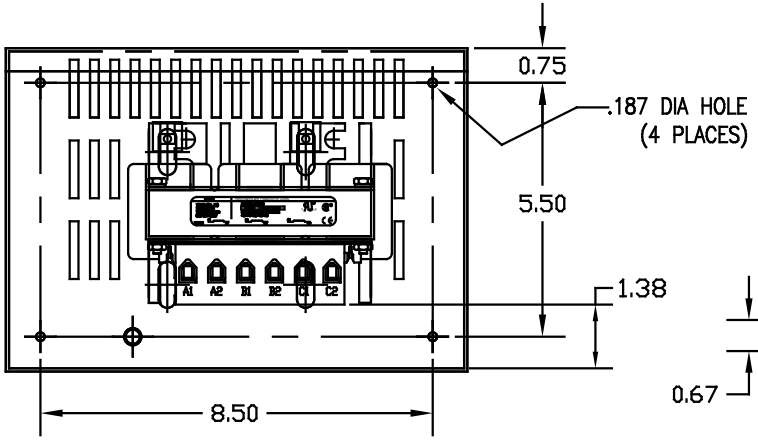

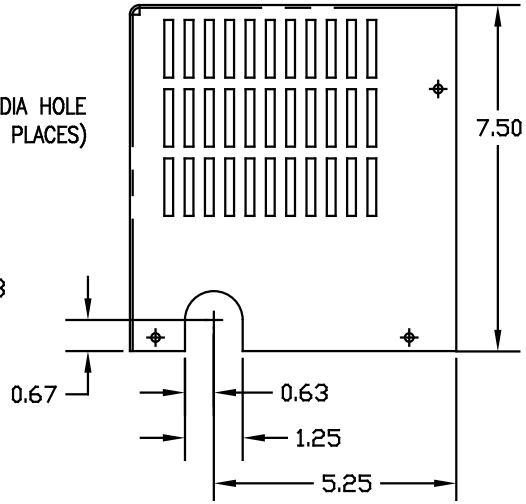

CATALOG NO	VOLTAGE	NEC MOTOR HP	NEC MOTOR CURRENT	WATTS LOSS	APPROX. WEIGHT-LBS	TERMINAL BLOCK TORQUE
KDRB23LC2	208/240	7.5	24.2	48	16	20 LB-IN
KDRB42HC2	575/600	7.5	9.0	61	16	20 LB-IN
KDRB43HC2	575/600	10	11.0	71	16	20 LB-IN
KDRB44HC2	575/600	15	17.0	73	16	20 LB-IN

NEC MOTOR CURRENTS SHOWN IN THE 208/240 VOLT CHART ARE BASED ON HORSE POWERS AT 208 VOLT. 575/600 VOLT CHART USE THE 575 VOLT CURRENT RATING.

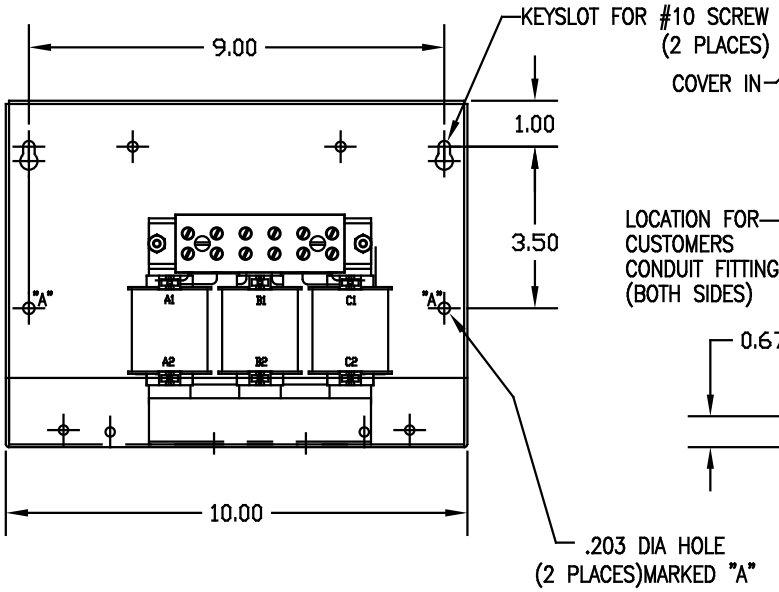

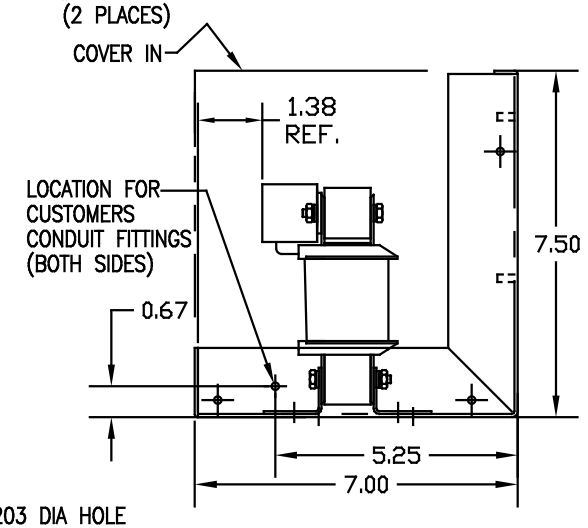

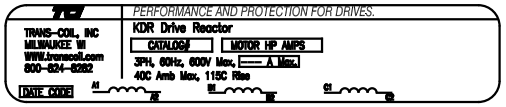

ENCLOSURE LABEL PLACED ON FRONT COVER.

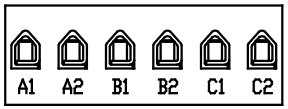

TERMINAL BLOCK MARKING

NOTE: A1, A2, B1, B2, C1, C2, MARKINGS ON COIL AND TERMINAL BLOCK FOR REFERENCE ONLY.

CUSTOMER IS RESPONSIBLE FOR INSTALLATION TO MEET ALL NATIONAL AND LOCAL ELECTRICAL CODES.

NO	REVISION	DATE	BY

TOLERANCES (EXCEPT AS NOTED)
DECIMAL .XX ±.03 .XXX±.01
FRACTIONAL ±1/32
ANGULAR ±1/2°

TCI 7878 N. 86th STREET MILWAUKEE, WI 53224

KDR (FRAME B) ENCLOSED WIDE RANGE REACTOR

DRN. BY DSW | DATE 02/25/03 | DWG. NO. KDR-70DG | C
SCALE 1:2 | APRVD. | SHT. 1 OF 1