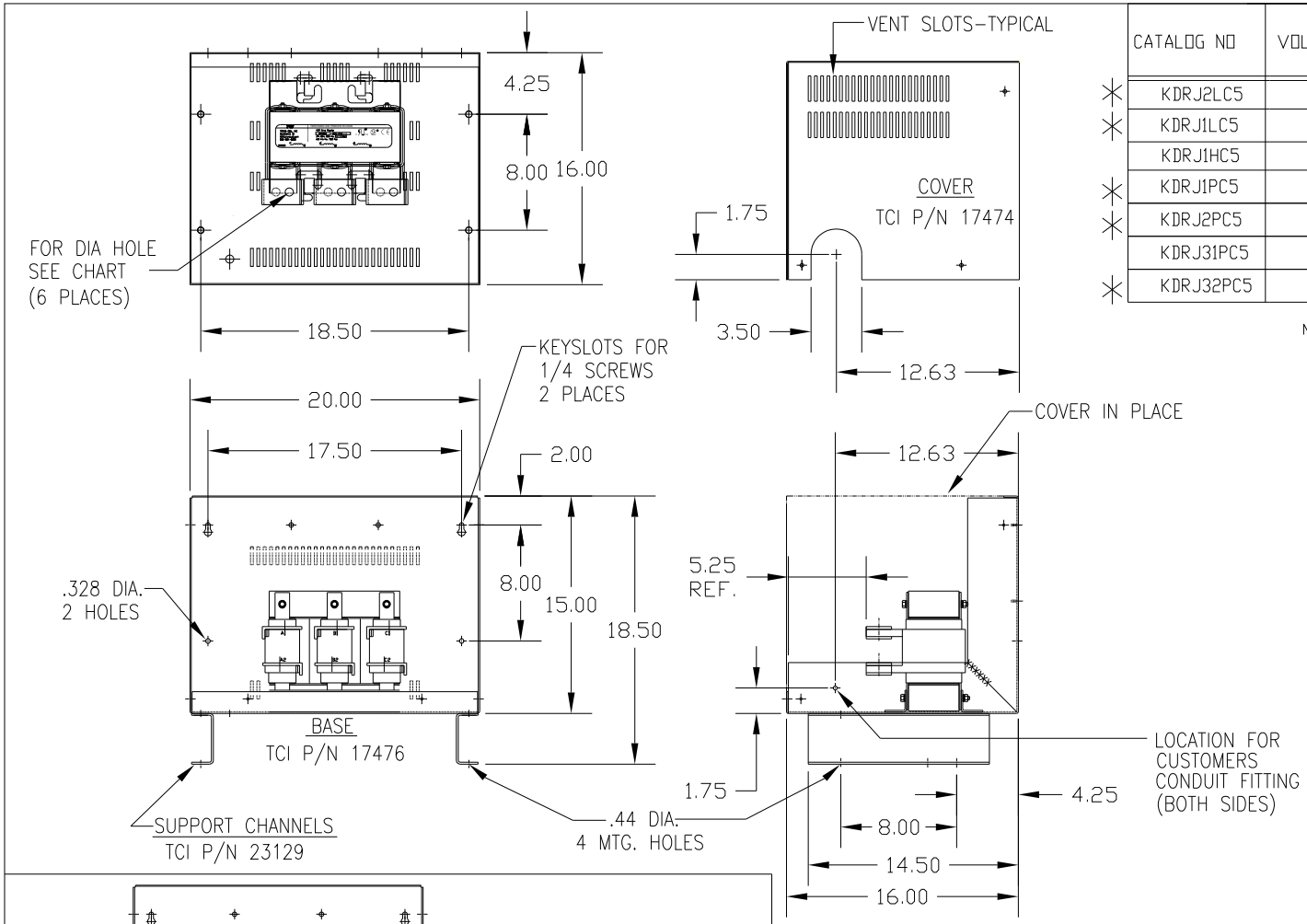

	CATALOG NO	VOLTAGE	NEC MOTOR HP	NEC MOTOR CURRENT	WATTS LOSS	APPROX. WEIGHT-LBS	TERMINAL HOLE SIZE
*	KDRJ2LC5	480	350	414	465	120	.56
*	KDRJ1LC5	480	400	477	470	120	.56
	KDRJ1HC5	480	200	240	420	120	.44
*	KDRJ1PC5	480	250	302	NOTE 1:	160	.56
*	KDRJ2PC5	480	300	361	NOTE 1:	160	.56
	KDRJ31PC5	575	300	289	NOTE 1:	160	.44
*	KDRJ32PC5	575	350	336	NOTE 1:	160	.56

NOTE 1: WATTS LOSS WILL VARY DUE TO FUNDAMENTAL FREQUENCY, CARRIER FREQUENCY AND OTHER SYSTEM CHARACTERISTICS.

KDR DRIVE REACTORS COMPLY WITH THE THERMAL AND ALTITUDE STANDARDS SET FORTH BY NEMA ST20-1992..

TCI — PERFORMANCE AND PROTECTION FOR DRIVES.
TRANS-COIL, INC
MILWAUKEE WI
WWW.transcoil.com
800-824-8282
KDR Drive Reactor
CATALOG# | MOTOR HP AMPS
3PH, 60Hz, 600V Max, --- A Max.
40C Amb Max, 155C Rise

ENCLOSURE LABEL PLACED ON FRONT COVER.

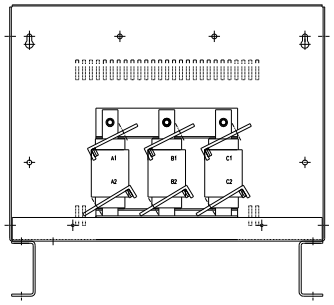

* FRONT VIEW OF REACTOR
NOTE TERMINALS ARE ANGLED.

CUSTOMER IS RESPONSIBLE FOR INSTALLATION TO MEET ALL NATIONAL AND LOCAL ELECTRICAL CODES.

NO	REVISION	DATE	BY
C	HOLE DIA UPDATE	1/29/03	DSW
B	2235 REACTOR MTG	09/15/03	DW
A	310 AMPS WERE 300		
A	365 AMPS WERE 360	9/24/01	RJC
	2112 ADD MOTOR AMPS	8/8/01	RJC

TOLERANCES (EXCEPT AS NOTED)
DECIMAL .XX ± .03 .XXX ± .01
FRACTIONAL ± 1/32
ANGULAR ± 1/2°

TCI 7878 N. 86th STREET MILWAUKEE, WI 53224

KDR ASSEMBLY, "J" FRAME "C5" ENCL., INPUT

DRN. BY DSW | DATE 8/08/01 | DWG. NO. B KDR-23DG
SCALE 1/8"=1" | APRVD.
SHT. 1 OF 1