SEE DWG# 26752 FOR SCHEMATIC

CUSTOMER IS RESPONSIBLE FOR INSTALLATION
TO MEET ALL NATIONAL AND LOCAL ELECTRICAL CODES.

NOTE: USE ONLY HUBS OR FITTINGS THAT COMPLY
WITH UL514B FOR TYPE 3R ENCLOSURES.

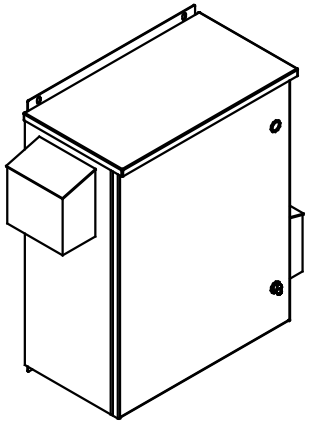

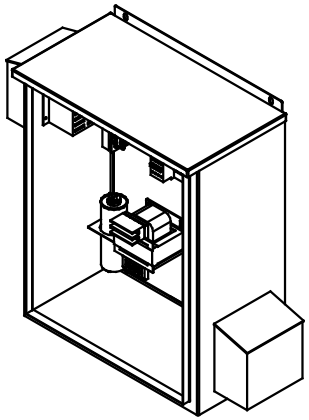

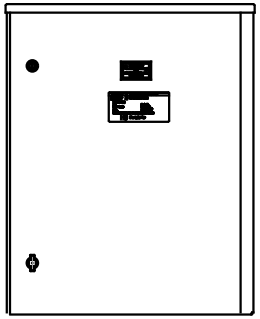

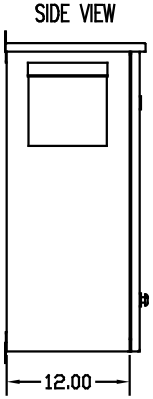

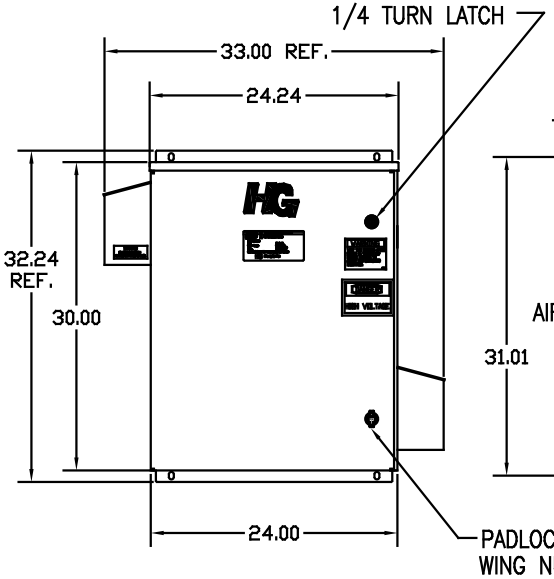

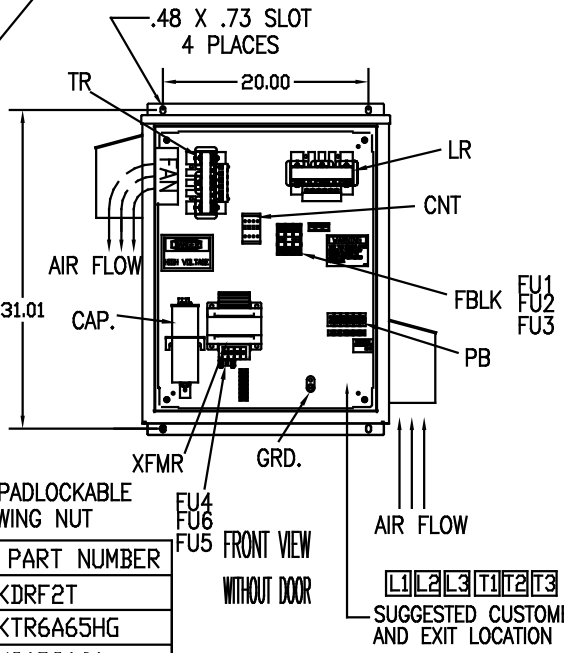

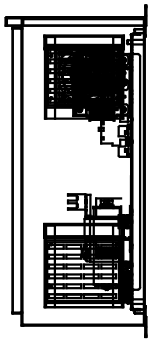

UNIT SPECIFICATIONS:					
KVAR	HARMONIC	VOLT	HZ	PHASE	HP
6	5TH	480	60	3	20
ENCLOSURE	UL TYPE 3R				
COLOR	WHITE				
APPROX.WT. LBS.	126				

SYMBOL	TCI PART NUMBER
LR	KDRF2T
TR	KTR6A65HG
CAP1, CAP2,. (3 KVAR)	KCAP3A6A
XFMR.	23896
Fu1, 2, 3	15752
Fu4,6	24009
Fu5	17567
CNT	26739

PB–POWER INPUT BLOCK:
WIRE RANGE–#18 TO #4 AWG.
TIGHTENING TORQUE 20 IN–LB.

GROUND LUG:
WIRE RANGE–1/0 TO #14 AWG.
TIGHTENING TORQUE 200 IN–LB.

NO	REVISION	DATE	BY

TOLERANCES (EXCEPT AS NOTED)
DECIMAL .XX ±.12 .XXX±.03
FRACTIONAL ±1/32
ANGULAR ±1/2°

TCI 7878 N. 86th STREET MILWAUKEE, WI 53224

HG20AW03STC, 20HP
480/3/60 UL TYPE 3R

DRN. BY DSW | DATE 08/25/08 | DWG. NO. C 103668DG
SCALE TO FIT | APRVD. | SHT. 1 OF 1