UNIT SPECIFICATIONS:					
KVAR	HARMONIC	VOLT	HZ	PHASE	HP
15	5TH	600	60	3	40
ENCLOSURE	NEMA 1- COLOR, BLACK				
OPTIONS	WITH CONTACTOR				
APPROX.WT. LBS.	185				

SYMBOL	TCI PART NUMBER
LR	KDRI41T
TR	KTR15C65HG
CAP	KCAP15C6B
XFMR.	24385
Fu1, 2, 3	11307
Fu4,6	13364
Fu5	24126
CNT	23021

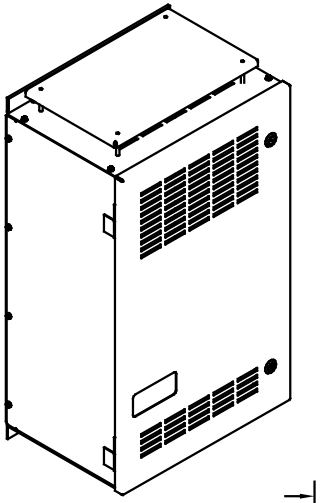

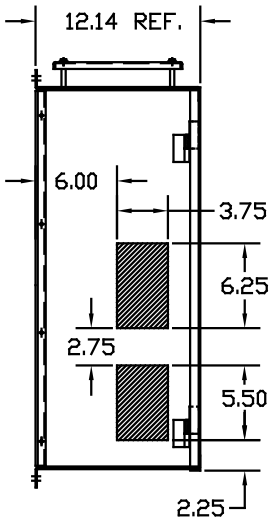

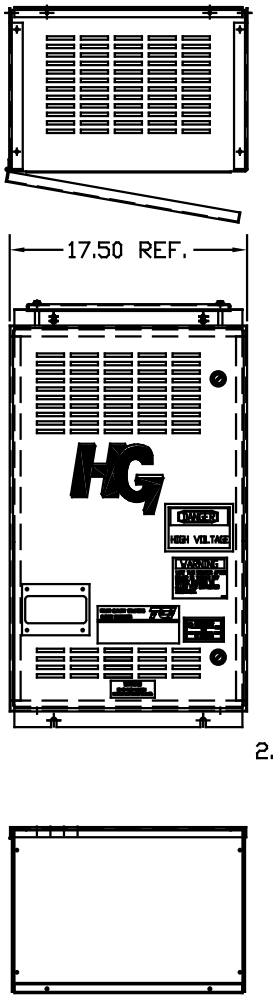

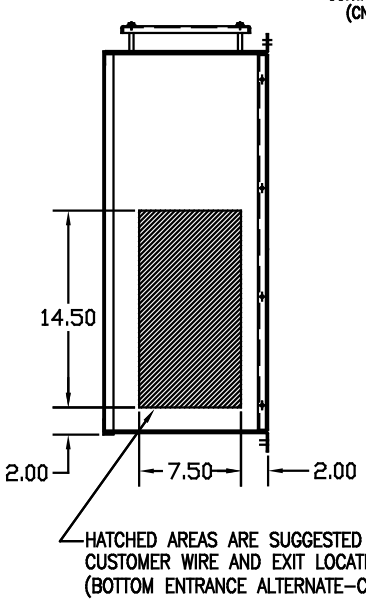

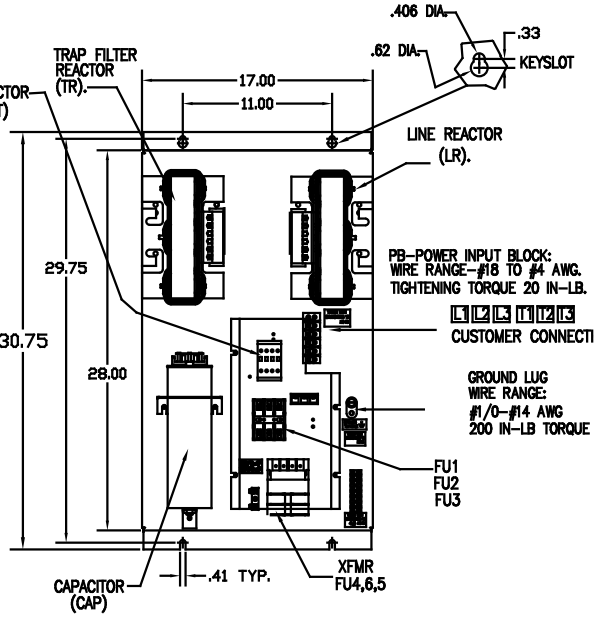

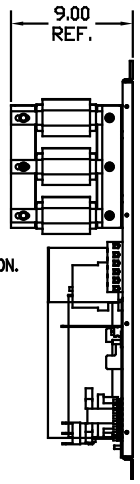

HATCHED AREAS ARE SUGGESTED
CUSTOMER WIRE AND EXIT LOCATIONS
(BOTTOM ENTRANCE ALTERNATE-CONSULT TCI)

ENCLOSURE NOT SHOWN

SEE DWG# 26878 FOR SCHEMATIC

CUSTOMER IS RESPONSIBLE FOR INSTALLATION
TO MEET ALL NATIONAL AND LOCAL ELECTRICAL CODES.

NO	REVISION	DATE	BY

TOLERANCES (EXCEPT AS NOTED)
DECIMAL .XX ±.03 .XXX±.01
FRACTIONAL ± 1/32
ANGULAR ± 1/2°

TCI 7878 N. 86th STREET MILWAUKEE, WI 53224

HG40CW01STC 40HP
600/3/60, ENCLOSED, WITH CNT

DRN. BY DSW | DATE 11/12/08 | DWG. NO. C 103550DG
SCALE TO FIT | APRVD. | SHT. 1 OF 1