UNIT SPECIFICATIONS:					
KVAR	HARMONIC	VOLT	HZ	PHASE	HP
10	5TH	480	60	3	30
ENCLOSURE		NEMA 1- COLOR, BLACK			
APPROX.WT. LBS.		135			

SYMBOL	TCI PART NUMBER
LR	KDRH1T
TR	KTR10A65HG
CAP (10 KVAR)	KCAP10A6B
XFMR.	23891
Fu1, 2, 3	11307
Fu4,6	21270
Fu5	13364
CNT	12434

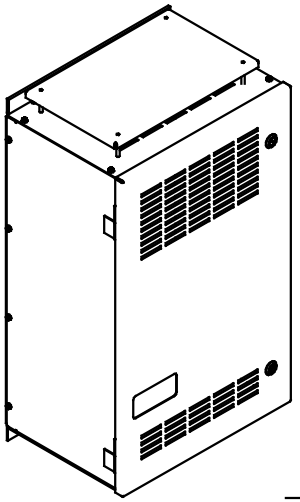

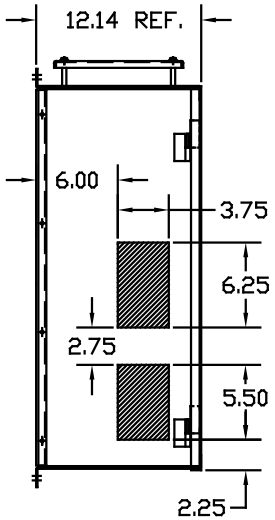

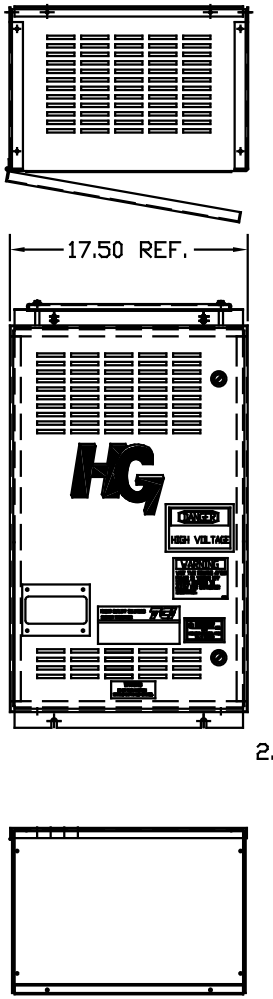

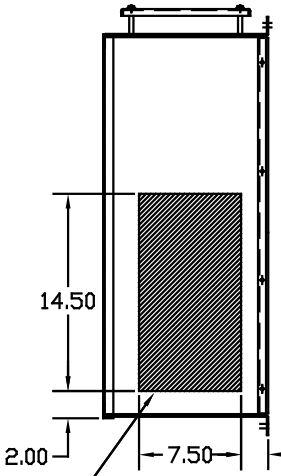

HATCHED AREAS ARE SUGGESTED
CUSTOMER WIRE AND EXIT LOCATIONS
(BOTTOM ENTRANCE ALTERNATE–CONSULT TCI)

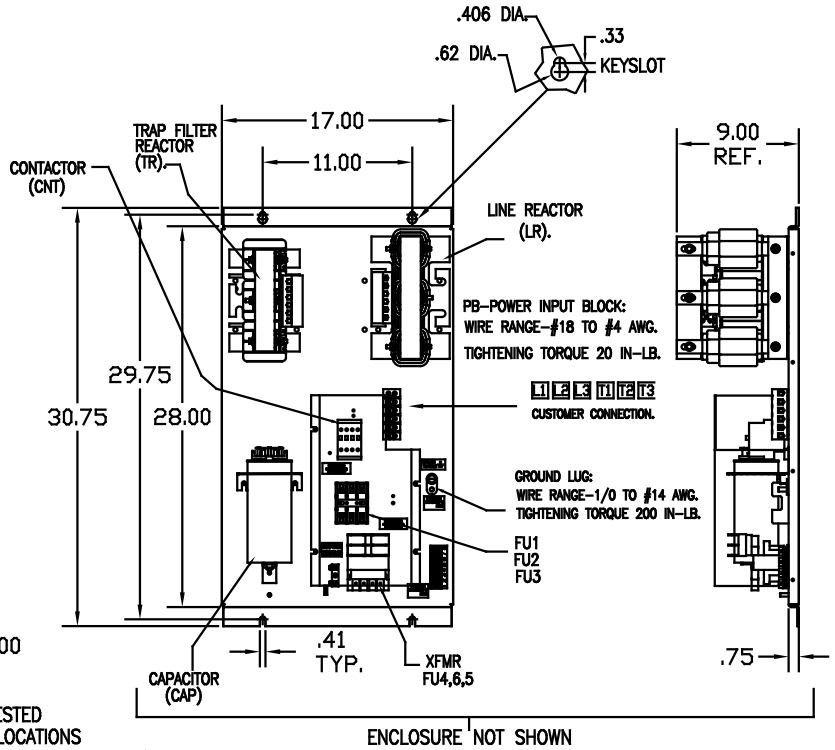

SEE DWG# 26689 FOR SCHEMATIC

CUSTOMER IS RESPONSIBLE FOR INSTALLATION
TO MEET ALL NATIONAL AND LOCAL ELECTRICAL CODES.

NO	REVISION	DATE	BY

TOLERANCES (EXCEPT AS NOTED)
DECIMAL .XX ±.03 .XXX±.01
FRACTIONAL ±1/32
ANGULAR ±1/2°

TCI 7878 N. 86th STREET MILWAUKEE, WI 53224

HG30AW01STC 30 HP
480/3/60, ENCLOSED, WITH CNT

DRN. BY DSW | DATE 7/7/08 | DWG. NO. C 103505DG
SCALE TO FIT | APRVD. | SHT. 1 OF 1