SEE 26822 FOR SCHEMATIC

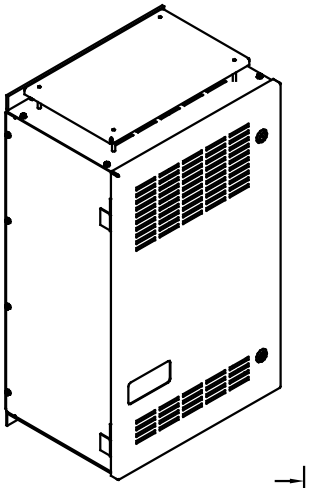

PB–POWER INPUT BLOCK:
WIRE RANGE–#18 TO #4 AWG.
TIGHTENING TORQUE 20 IN–LB.

GROUND LUG:
WIRE RANGE–1/0 TO #14 AWG.
TIGHTENING TORQUE 200 IN–LB.

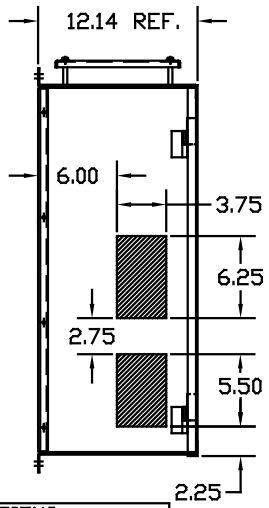

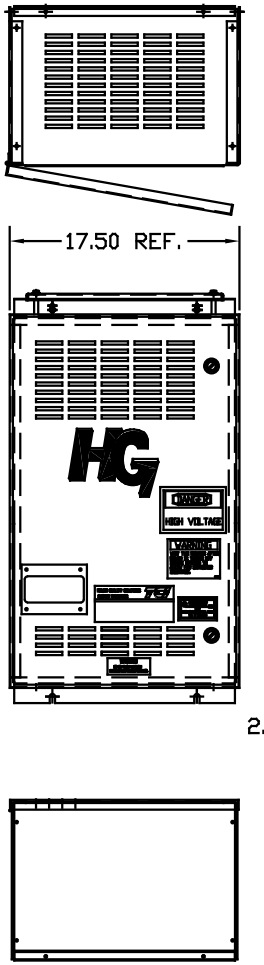

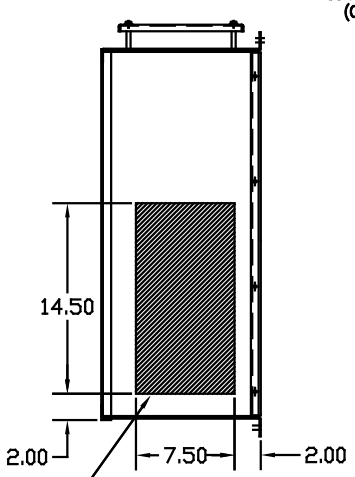

HATCHED AREAS ARE SUGGESTED
CUSTOMER WIRE AND EXIT LOCATIONS
(BOTTOM ENTRANCE ALTERNATE–CONSULT TCI)

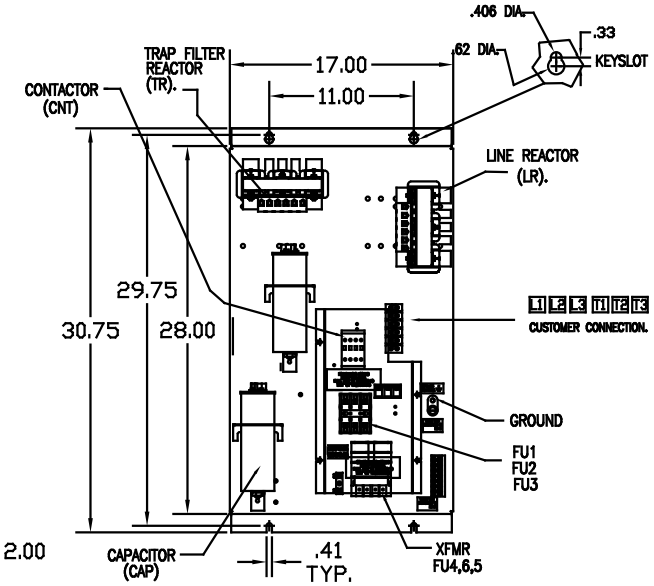

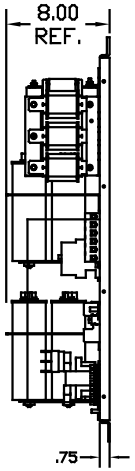

UNIT SPECIFICATIONS:					
KVAR	HARMONIC	VOLT	HZ	PHASE	HP
3	5TH	240	60	3	7.5
ENCLOSURE	NEMA 1- COLOR, BLACK				
	WITH CONTACTOR				
APPROX.WT. LBS.	115				

SYMBOL	TCI PART NUMBER
LR	KDRC21T
TR	KTR3B65HG
CAP1,2,3,4	KCAP3A6A
XFMR.	23891
Fu1, 2, 3	15752
Fu4,6	24073
Fu5	13364
CNT	12434

CUSTOMER IS RESPONSIBLE FOR INSTALLATION
TO MEET ALL NATIONAL AND LOCAL ELECTRICAL CODES.

NO	REVISION	DATE	BY

TOLERANCES (EXCEPT AS NOTED)
DECIMAL .XX ±.03 .XXX±.01
FRACTIONAL ±1/32
ANGULAR ±1/2°

TCI 7878 N. 86th STREET MILWAUKEE, WI 53224

HG8BW01STC, 7.5HP
240/3/60, ENCLOSED, WITH CNT

DRN. BY DSW | DATE 10/15/08 | DWG. NO. C 103588DG
SCALE TO FIT | APRVD. | SHT. 1 OF 1