SEE DWG# 26972-2 FOR SCHEMATIC

CUSTOMER IS RESPONSIBLE FOR INSTALLATION
TO MEET ALL NATIONAL AND LOCAL ELECTRICAL CODES.

NOTE: USE ONLY HUBS OR FITTINGS THAT COMPLY
WITH UL514B FOR TYPE 3R ENCLOSURES.

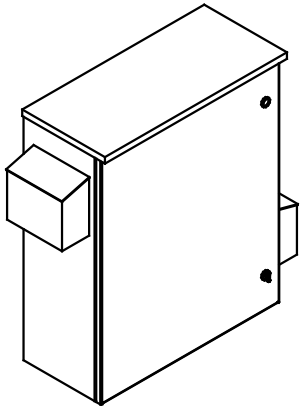

SIDE VIEW

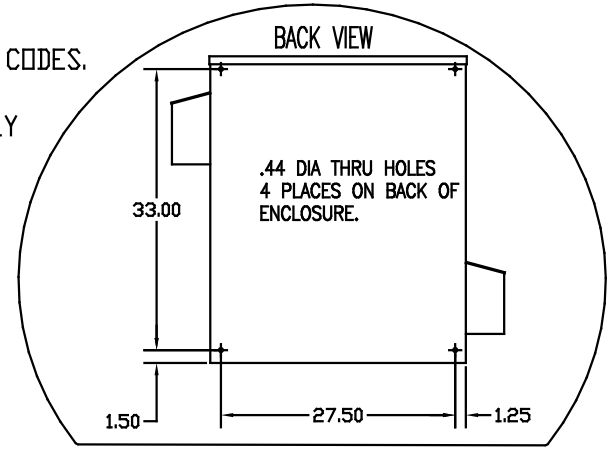

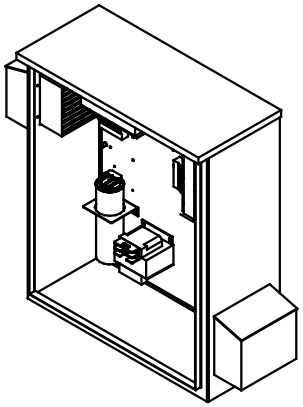

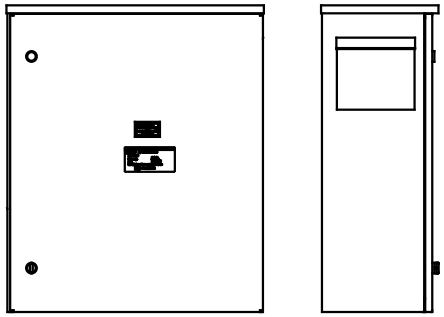

INSIDE VIEW
OF DOOR

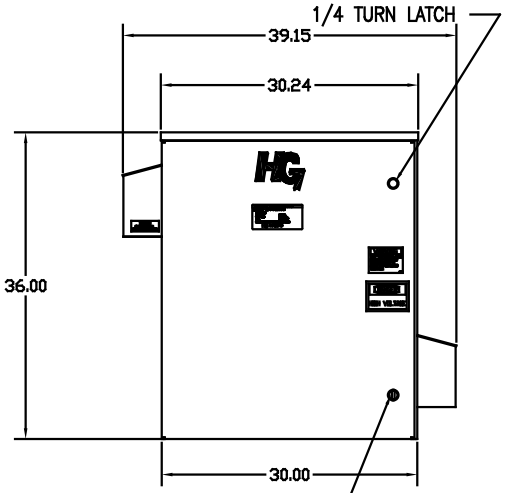

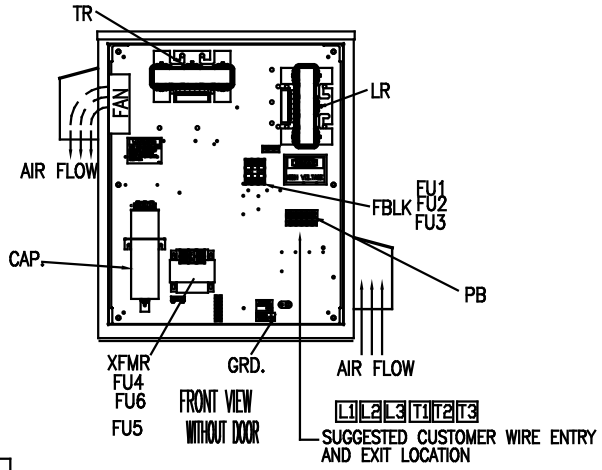

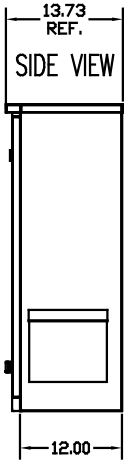

UNIT SPECIFICATIONS:					
KVAR	HARMONIC	VOLT	HZ	PHASE	HP
15	5TH	600	60	3	40
ENCLOSURE	UL TYPE 3R				
COLOR	WHITE				
APPROX.WT. LBS.	239				

SYMBOL	TCI PART NUMBER
LR	KDRI41T
TR	KTR15C65HG
CAP (15 KVAR) 1 PLACE	KCAP15C6B
XFMR.	24381
Fu1, 2, 3	11307
Fu4,6	23405
Fu5	17567

PB-POWER INPUT BLOCK:
WIRE RANGE-#18 TO #4 AWG.
TIGHTENING TORQUE 20 IN-LB.

GROUND LUG:
WIRE RANGE-2/0 TO #6 AWG.
TIGHTENING TORQUE 120 IN-LB.

NO	REVISION	DATE	BY

TOLERANCES (EXCEPT AS NOTED)
DECIMAL .XX ±.12 .XXX±.03
FRACTIONAL ±1/32
ANGULAR ±1/2°

TCI 7878 N. 86th STREET MILWAUKEE, WI 53224

HG40CW03ST, 40HP
600/3/60 UL TYPE 3R

DRN. BY DSW | DATE 02/24/09 | DWG. NO. C 103636DG
SCALE TO FIT | APRVD. | SHT. 1 OF 1