SEE DWG# 26756 FOR SCHEMATIC

CUSTOMER IS RESPONSIBLE FOR INSTALLATION
TO MEET ALL NATIONAL AND LOCAL ELECTRICAL CODES.

NOTE: USE ONLY HUBS OR FITTINGS THAT COMPLY
WITH UL514B FOR TYPE 3R ENCLOSURES.

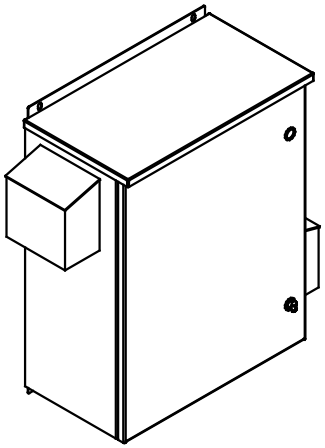

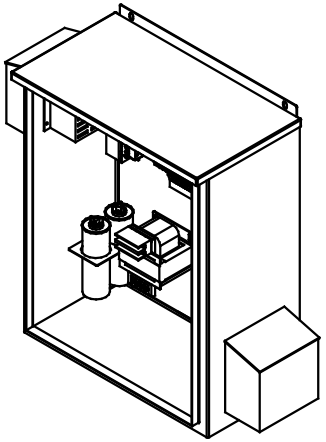

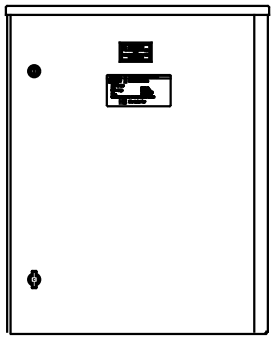

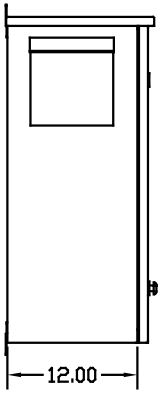

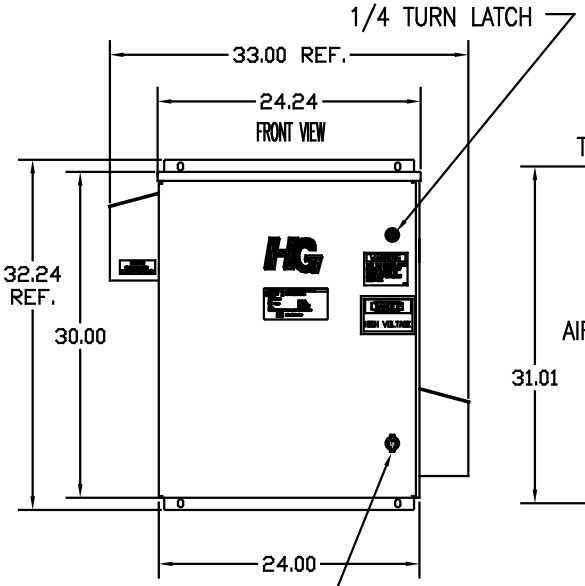

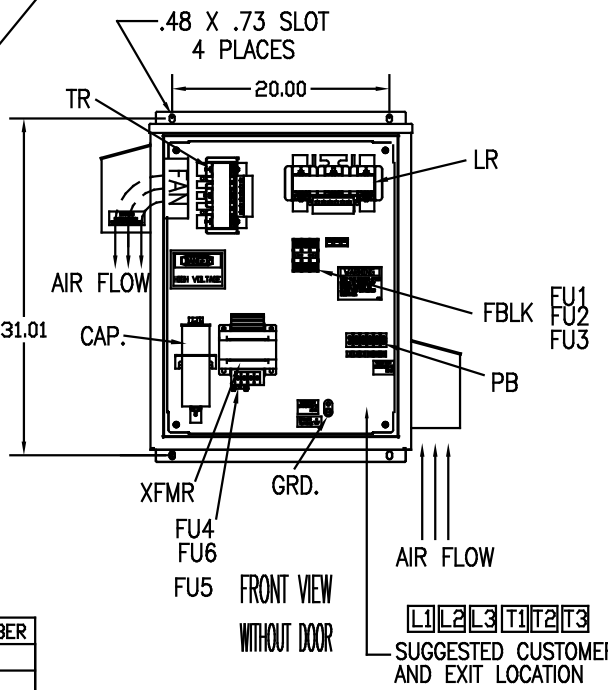

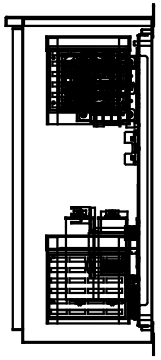

UNIT SPECIFICATIONS:					
KVAR	HARMONIC	VOLT	HZ	PHASE	HP
8	5TH	480	60	3	25
ENCLOSURE	UL TYPE 3R.				
COLOR	WHITE				
APPROX.WT. LBS.	144				

SYMBOL	TCI PART NUMBER
LR	KDRF3T
TR	KTR8A65HG
CAP (3 KVAR)	KCAP3A6A
CAP (5 KVAR)	KCAP5A6AB
XFMR.	23896
Fu1, 2, 3	11306
Fu4,6	24009
Fu5	17567

PB-POWER INPUT BLOCK:
WIRE RANGE-#18 TO #4 AWG.
TIGHTENING TORQUE 20 IN-LB.

GROUND LUG:
WIRE RANGE-1/0 TO #14 AWG.
TIGHTENING TORQUE 200 IN-LB.

NO	REVISION	DATE	BY

TOLERANCES (EXCEPT AS NOTED)
DECIMAL
.XX ± .12
.XXX ± .06
FRACTIONAL
± 1/32
ANGULAR
± 1/2°

TCI 7878 N. 86th STREET
MILWAUKEE, WI 53224

HG25AW03ST, 25HP
480/3/60 UL TYPE 3R

DWN. BY DSW
DATE 08/26/08
DWG. NO. C 103614DG
SCALE TO FIT
APRVD.
SHT. 1 OF 1