UNIT SPECIFICATIONS:					
KVAR	HARMONIC	VOLT	HZ	PHASE	HP
5	5TH	600	60	3	15
ENCLOSURE	NEMA 1- COLOR, BLACK				
APPROX.WT. LBS.	75				

SYMBOL	TCI PART NUMBER
LR	KDRF41T
TR	KTR5C65HG
CAP.	17815
Fu1, 2, 3	11262

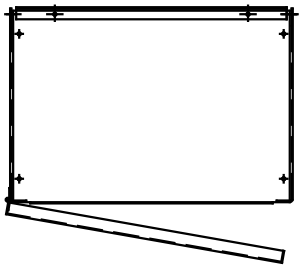

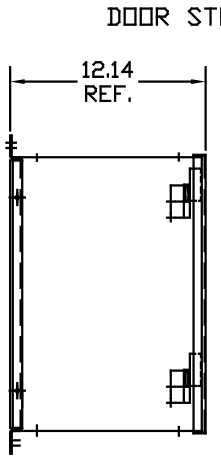

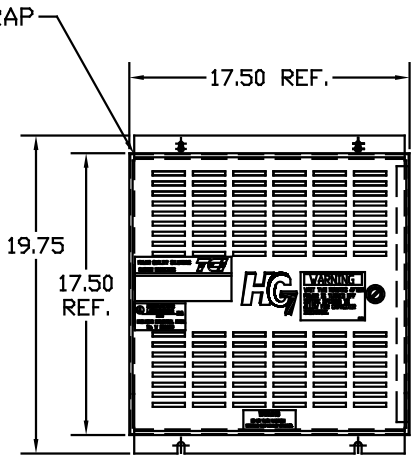

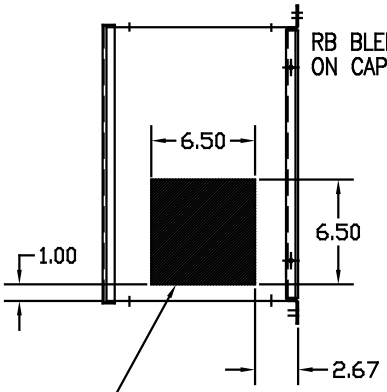

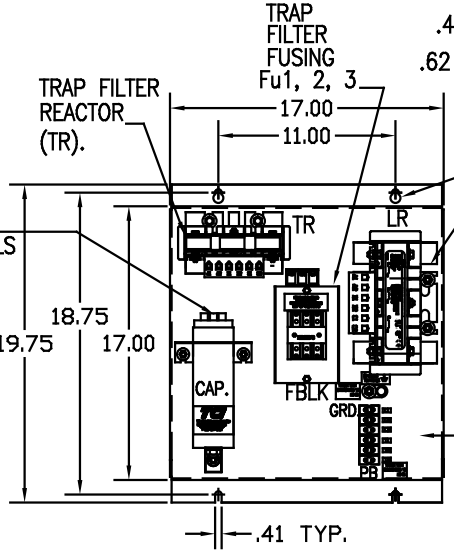

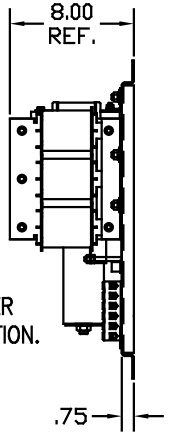

HATCHED AREAS ARE SUGGESTED
CUSTOMER WIRE AND EXIT LOCATIONS
(BOTTOM ENTRANCE ALTERNATE–CONSULT TCI)

ENCLOSURE NOT SHOWN

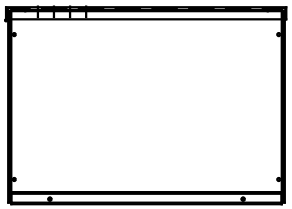

SEE 25114 FOR SCHEMATIC

CUSTOMER IS RESPONSIBLE FOR INSTALLATION
TO MEET ALL NATIONAL AND LOCAL ELECTRICAL CODES.

PB–POWER INPUT BLOCK:
WIRE RANGE–#18 TO #4 AWG.
TIGHTENING TORQUE 20 IN–LB.

GROUND LUG:
WIRE RANGE–1/0 TO #14 AWG.
TIGHTENING TORQUE 200 IN–LB.

NO	REVISION	DATE	BY
1	MOVED POWER BLOCK	02/21/06	DSW

TOLERANCES (EXCEPT AS NOTED)
DECIMAL .XX ±.03 .XXX±.01
FRACTIONAL ± 1/32
ANGULAR ± 1/2°

TCI 7878 N. 86th STREET MILWAUKEE, WI 53224

HG15CW01ST, HG7 STANDARD
15HP, 600/3/60, TYPE 1

DRN. BY DSW | DATE 03/16/05 | DWG. NO. C 102473DG
SCALE TO FIT | APRVD. | SHT. 1 OF 1